DAMAGED VEHICLE DISPOSAL PRECAUTION (SRS AIRBAG SYSTEM)

For SRS airbag system adjustment methods, refer to the LEXUS Repair Manual.

(1) When using an electric welder, first remove all airbags and the seat belt pretensioner.

(2) If impacts are likely to occur to the front airbag sensor, side airbag sensor, rear airbag sensor or seat position sensor, remove each sensor as necessary beforehand.

(3) Do not allow the front airbag sensor, side airbag sensor, rear airbag sensor or seat position sensor to become heated to high temperatures.

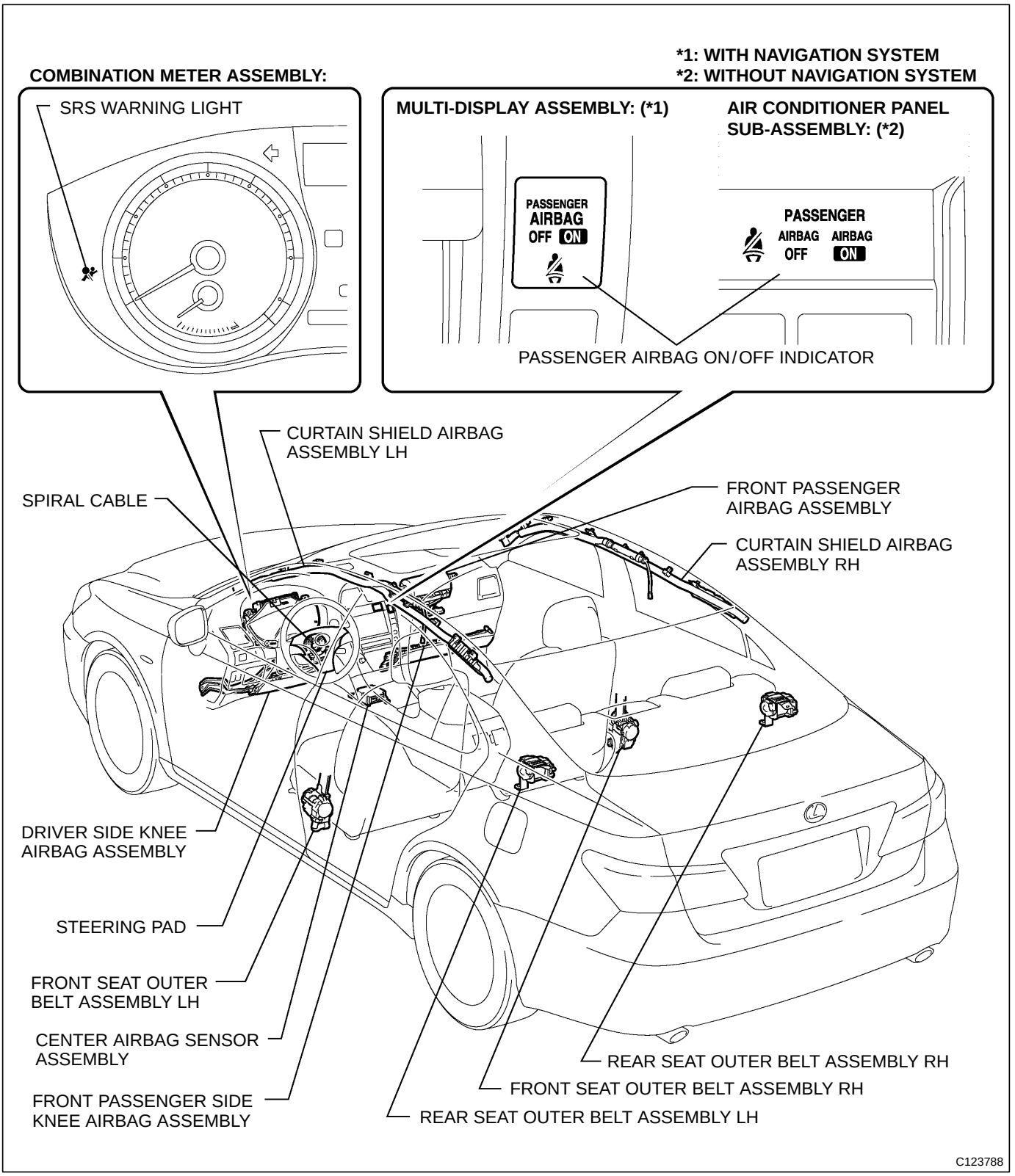

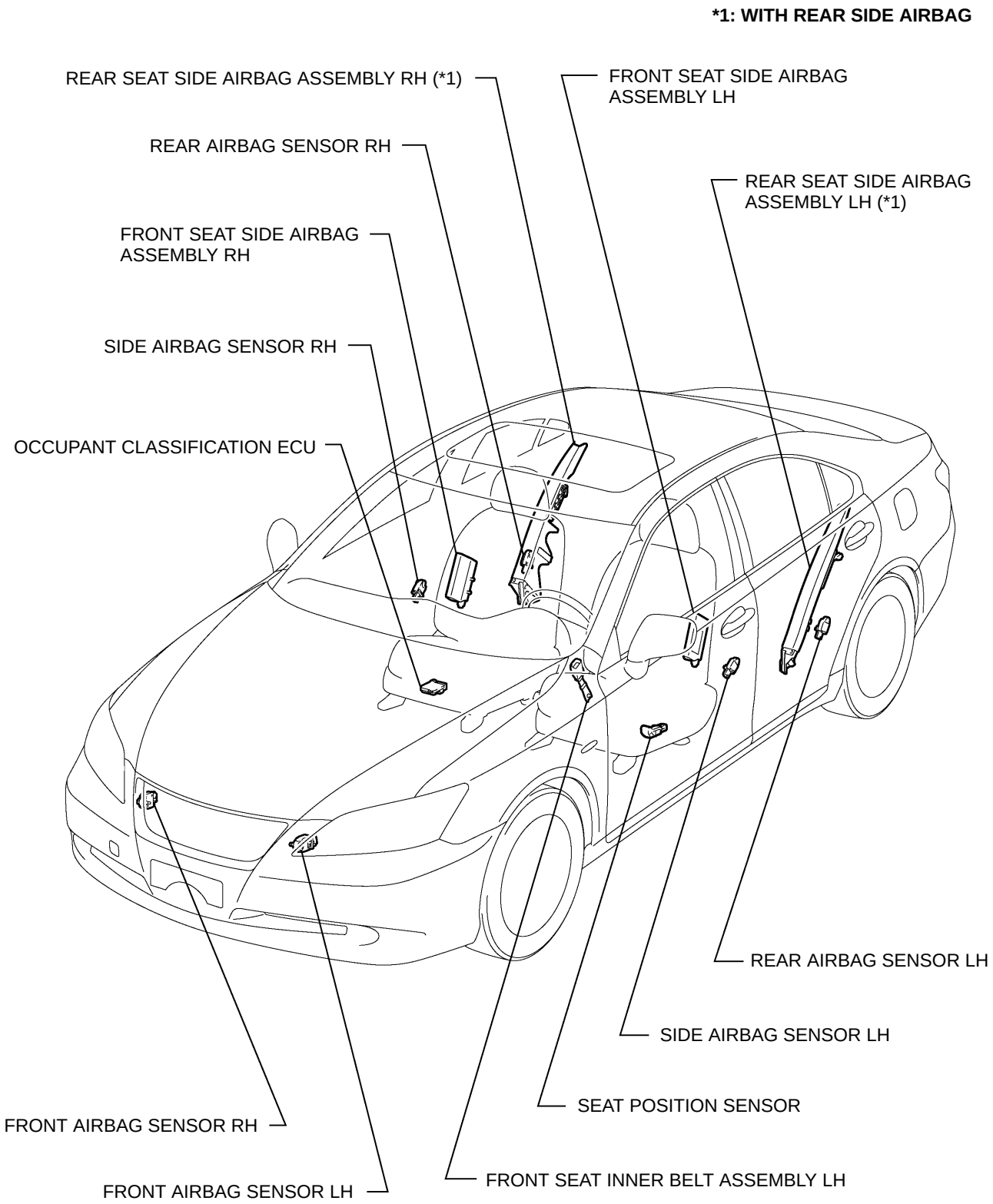
*1: WITH REAR SIDE AIRBAG
REAR SEAT SIDE AIRBAG ASSEMBLY RH (*1)
FRONT SEAT SIDE AIRBAG ASSEMBLY LH
REAR AIRBAG SENSOR RH
REAR SEAT SIDE AIRBAG ASSEMBLY LH (*1)
FRONT SEAT SIDE AIRBAG ASSEMBLY RH
SIDE AIRBAG SENSOR RH
OCCUPANT CLASSIFICATION ECU
REAR AIRBAG SENSOR LH
SIDE AIRBAG SENSOR LH
SEAT POSITION SENSOR
FRONT AIRBAG SENSOR RH
FRONT SEAT INNER BELT ASSEMBLY LH
FRONT AIRBAG SENSOR LH
C123787